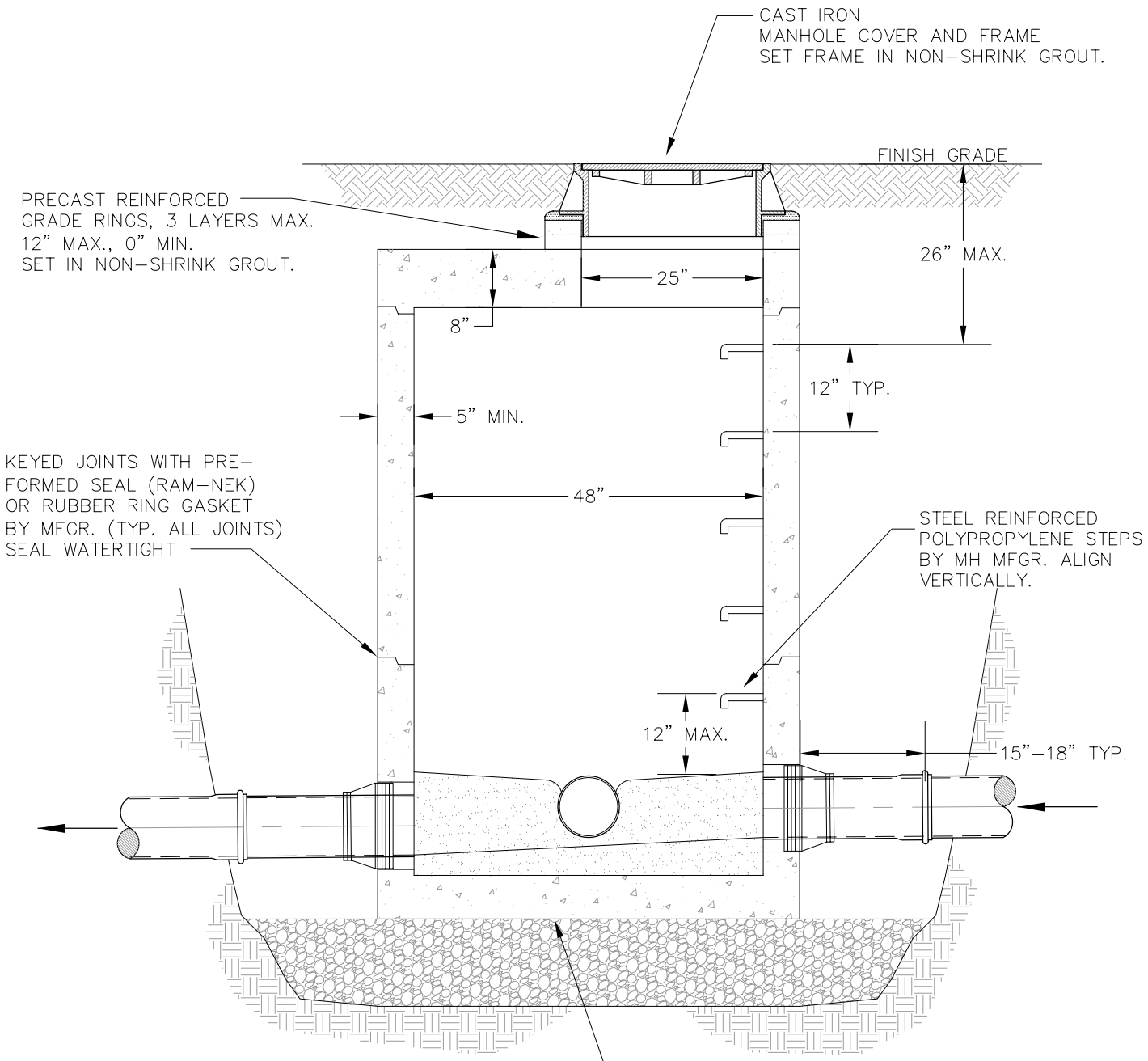

ALL PRECAST MANHOLE SECTIONS SHALL MEET ASTM C-478.

STANDARD MANHOLE REQUIRED WHEN DEPTH FROM FINISH GRADE TO INVERT IS 6 FEET OR MORE.

City of Amity
109 Maddox Street
Amity, Oregon 97101
503.835.3711

FLAT-TOP MANHOLE
PIPES LESS THAN 24" DIAM.

DETAIL NO.

D-205

3/31/04