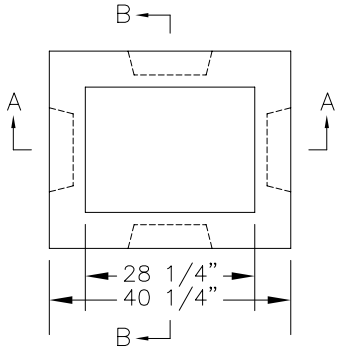

TOP VIEW

INLET TYPE	W	W1
G–1	2' 8–7/8"	1' 8–7/8"
G–2, G–2M	3' 3–3/8"	2' 3–3/8"

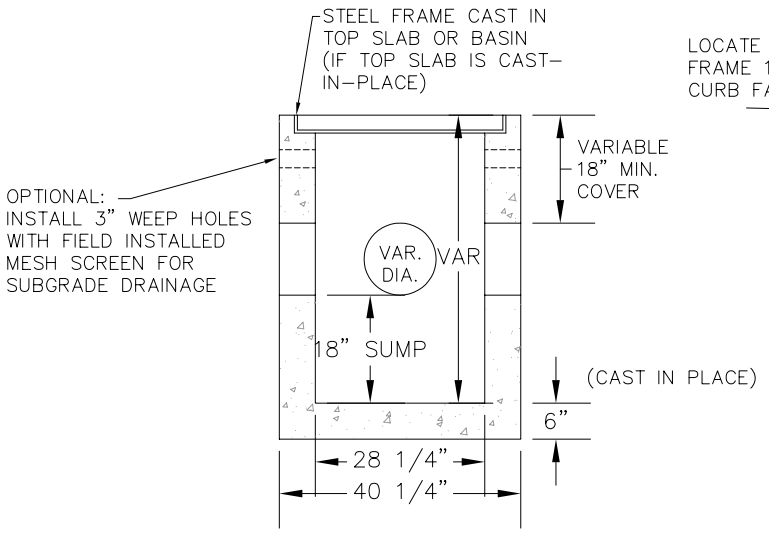

SECTION A–A

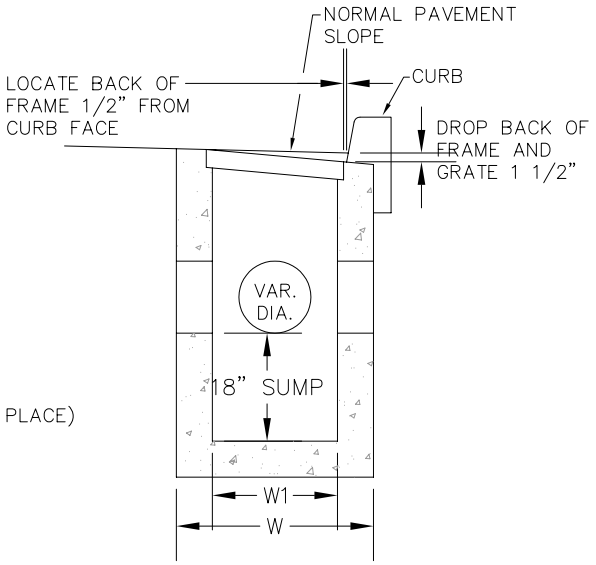

SECTION B–B

NOTES:
1. CONCRETE STRENGTH SHALL BE 3300 PSI.
2. PRECAST BASE WALLS SHALL BE A MINIMUM 4" THICK. CAST–IN–PLACE BASE WALLS SHALL BE 6" THICK.

TYPE	W	I.W
STANDARD	1'–9"	1'–8 1/4"

TYPE	DIA. PIPE	W	I.W
STANDARD	10"–12"	1'–10 3/4"	1'–9 3/8"

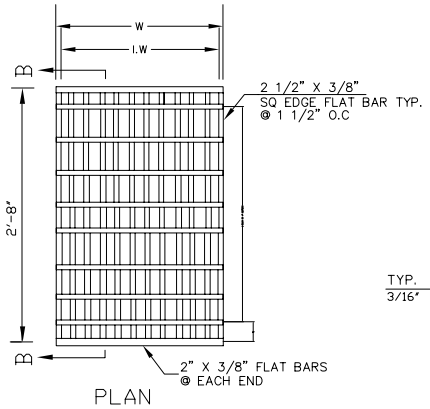

PLAN

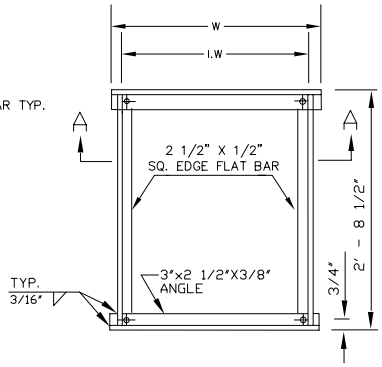

PLAN

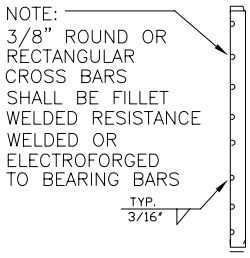

SECTION B–B

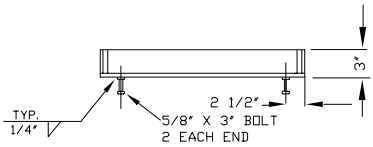

SECTION A–A'

NOTE:
USE VERTICAL BEADS IN CORNERS, FILLET WELD JOINT ON BOTOM OF FRAME. GRATE MUST REST FLAT ON FRAME SURFACE.

City of Amity
109 Maddox Street
Amity, Oregon 97101
503.835.3711

STANDARD INLETS, FRAMES & GRATES

DETAIL NO.
D-300
3/31/04