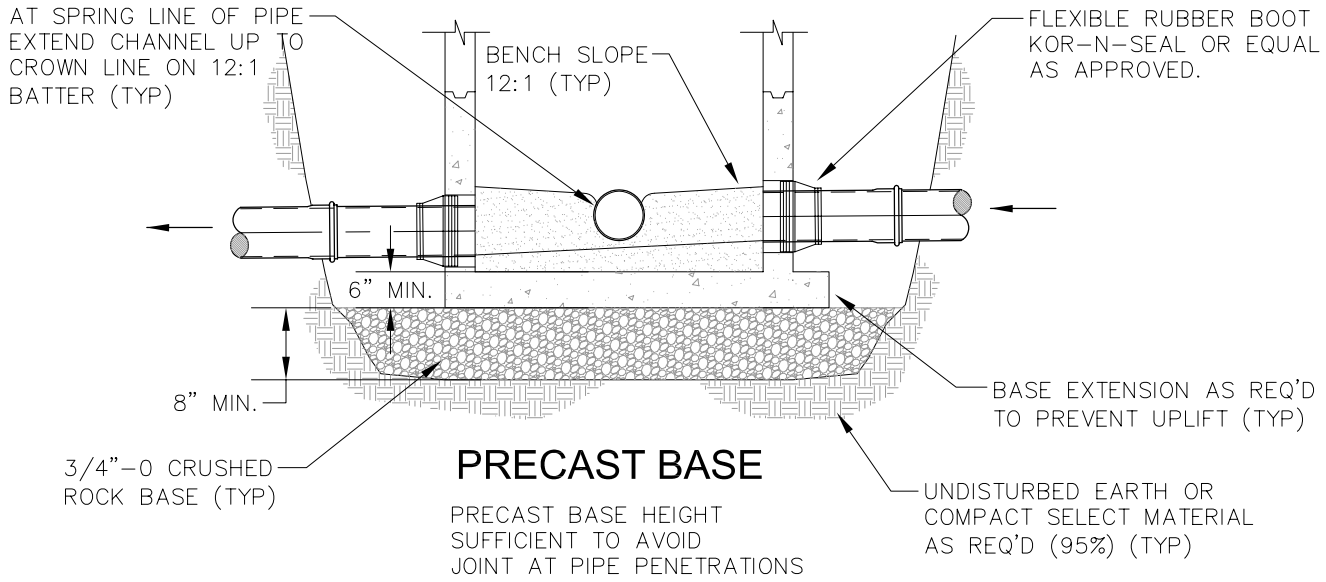

PRECAST BASE

PRECAST BASE HEIGHT SUFFICIENT TO AVOID JOINT AT PIPE PENETRATIONS

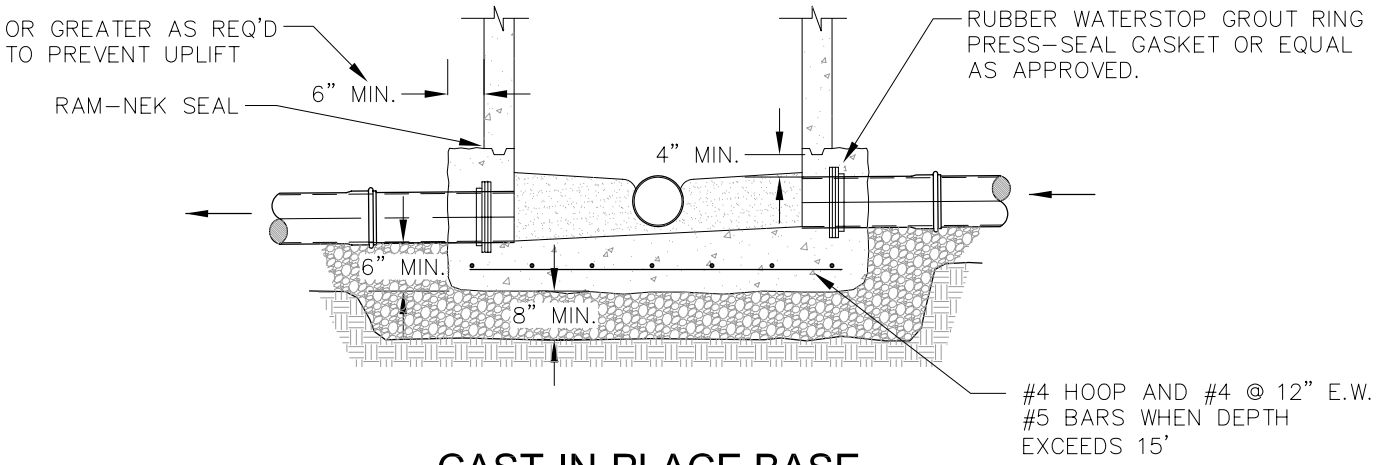

CAST-IN-PLACE BASE

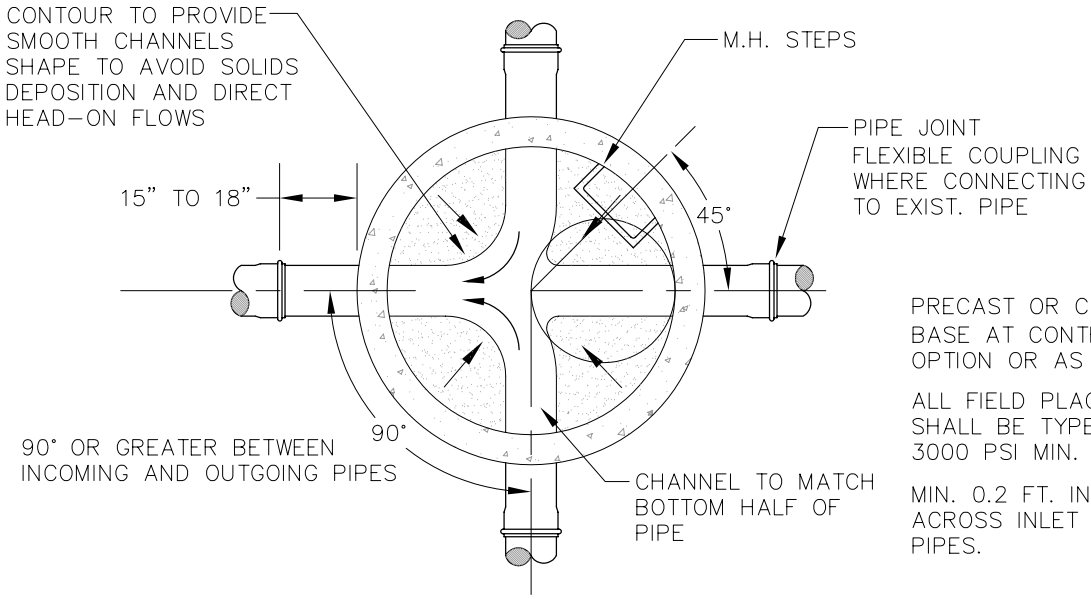

PRECAST OR CAST-IN-PLACE BASE AT CONTRACTOR'S OPTION OR AS DIRECTED.

ALL FIELD PLACED CONCRETE SHALL BE TYPE II PCC WITH 3000 PSI MIN. STRENGTH

MIN. 0.2 FT. INVERT DROP ACROSS INLET AND OUTLET PIPES.

City of Amity
109 Maddox Street
Amity, Oregon 97101
503.835.3711

MANHOLE BASE
STANDARD DETAILS

DETAIL NO.
S-210
12/5/03