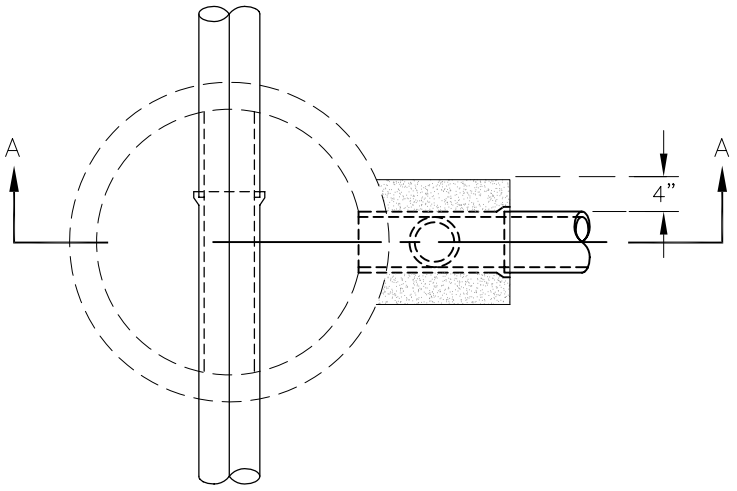

PLAN

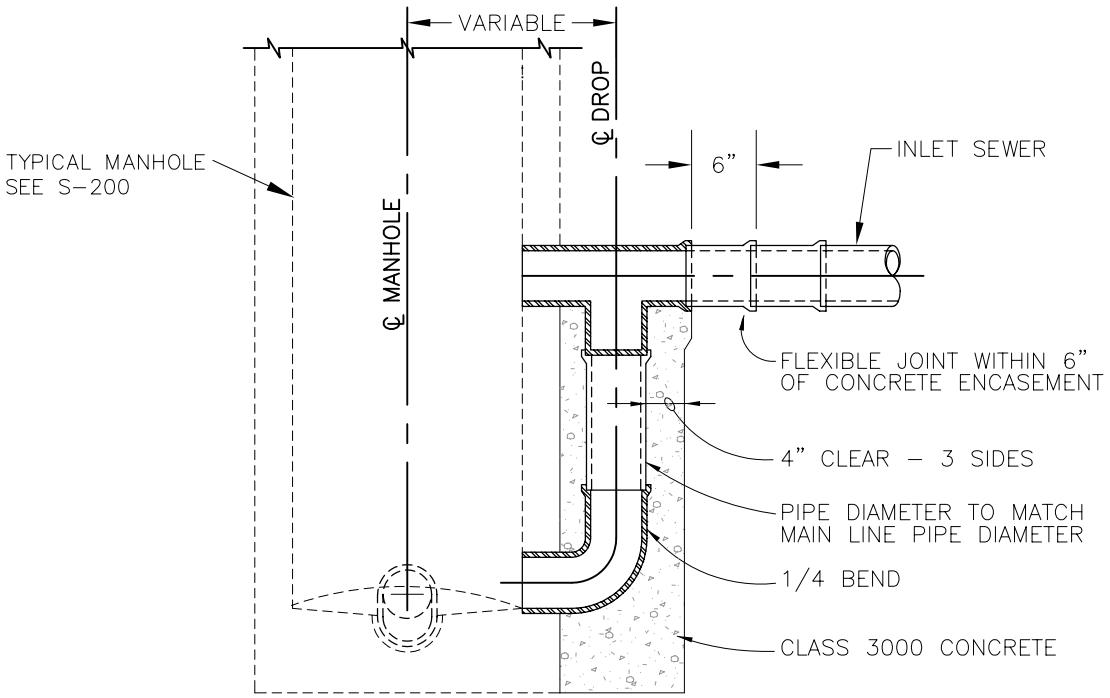

SECTION A-A

City of Amity
109 Maddox Street
Amity, Oregon 97101
503.835.3711

STANDARD OUTSIDE DROP MANHOLE

DETAIL NO.

S-225

3/31/04