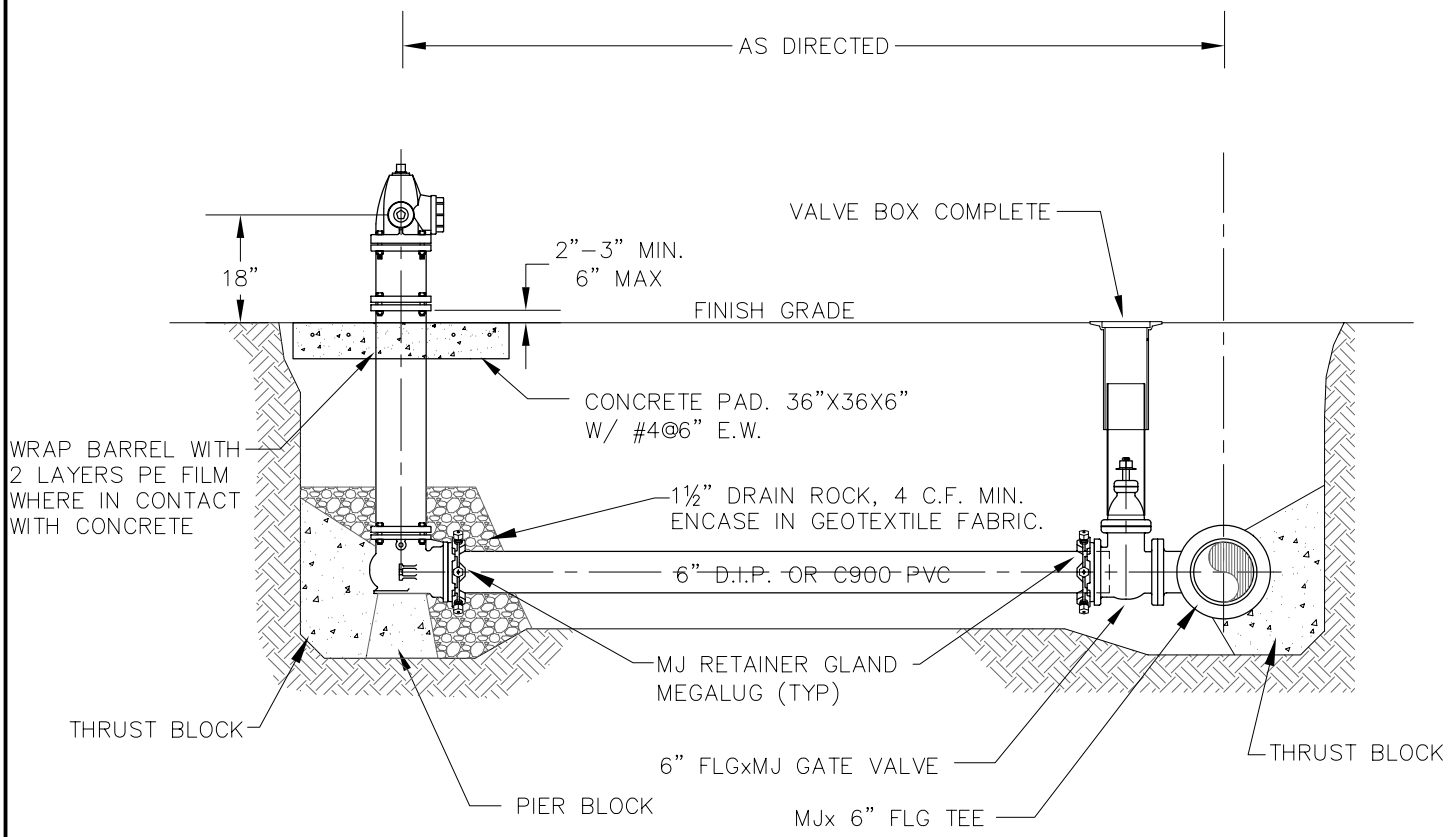


NOTES:

1. FIELD VERIFY SPOOL LENGTHS AND HYDRANT BARREL LENGTH REQUIRED AT EACH HYDRANT. NO JOINTS ALLOWED WHERE SPOOL LENGTH IS LESS THAN 18 FEET.

2. HYDRANT SHALL BE INSTALLED PLUMB.

3. KEEP DRAIN HOLES CLEAR AND FREE TO DRAIN.

4. SEE DETAILS FOR VALVE SETTING,THRUST BLOCKING, AND TRENCH.

5. HYDRANTS, VALVES AND OTHER MATERIALS SHALL BE AS SPECIFIED IN CITY'S STANDARDS MANUAL.

6. A MINIMUM OF 36" OF CLEAR SPACE AROUND HYDRANTS IS REQUIRED PER UFC (NO POSTS, WALLS, SIGNS, ETC.). 5 FOOT MIN. DESIRED. THERE SHALL BE NO OBSTRUCTIONS DIRECTLY IN LINE WITH ANY OF THE PORTS OF A HYDRANT.

7. HYDRANT PUMPER PORT SHALL FACE DIRECTION OF ACCESS.

City of Amity
109 Maddox Street
Amity, Oregon 97101
503.835.3711

STANDARD FIRE HYDRANT ASSEMBLY DETAIL

DETAIL NO.
W-300
12/3/03