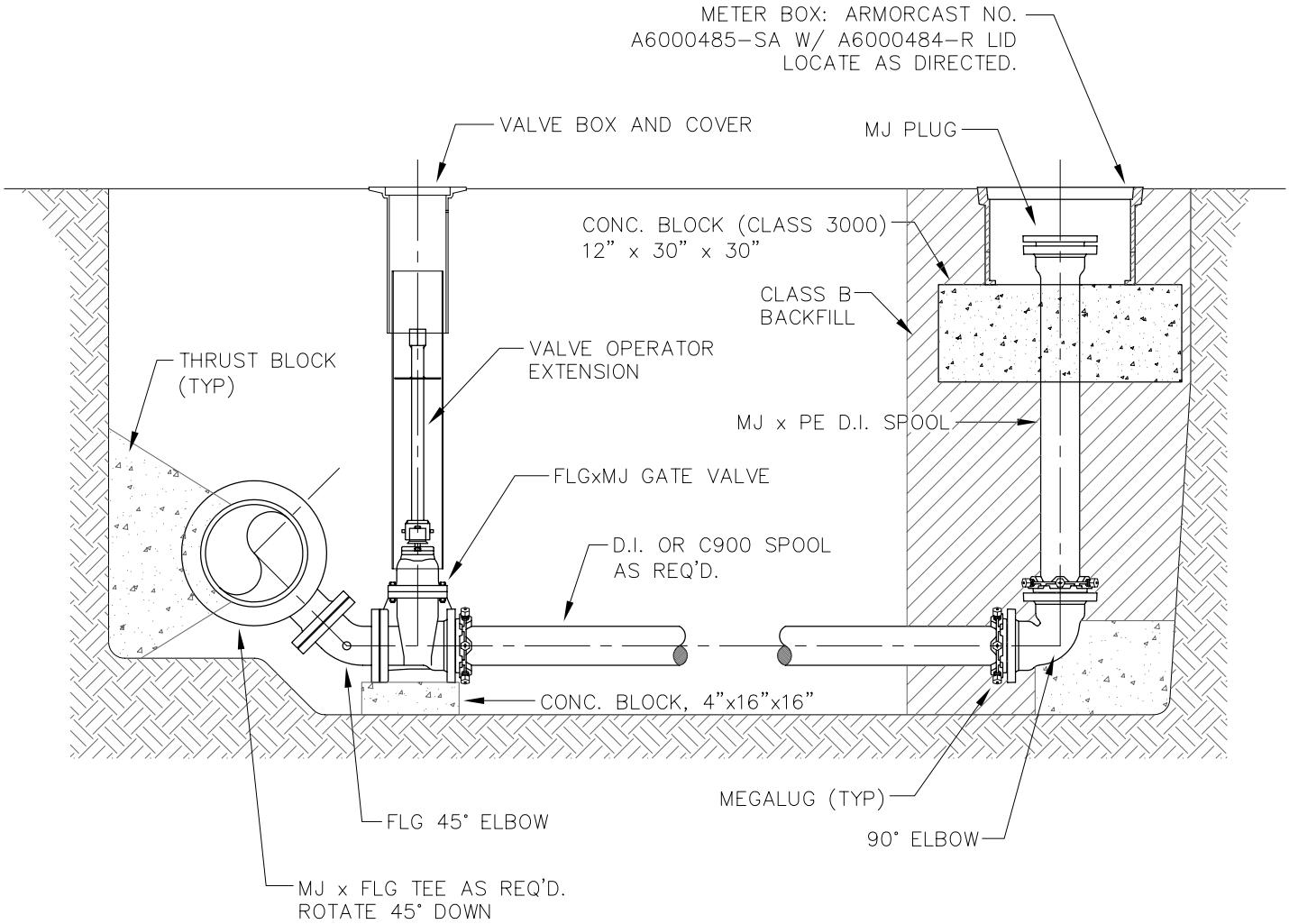

MAIN SIZE	BLOW-OFF SIZE
6"	4"
8"	4"
10"	6"
12"	6"
14"	8"
16"	8"
18"	10"
20"	10"
24"	12"

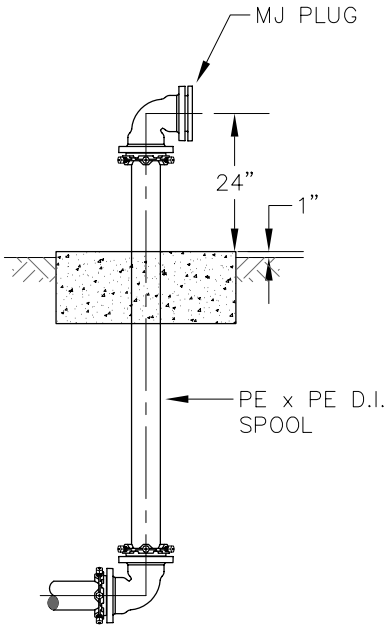

ALTERNATE EXPOSED END
DISCHARGE AS DIRECTED

City of Amity
109 Maddox Street
Amity, Oregon 97101
503.835.3711

4"+ BLOW-OFF ASSEMBLY

DETAIL NO.
W-405
3/30/04