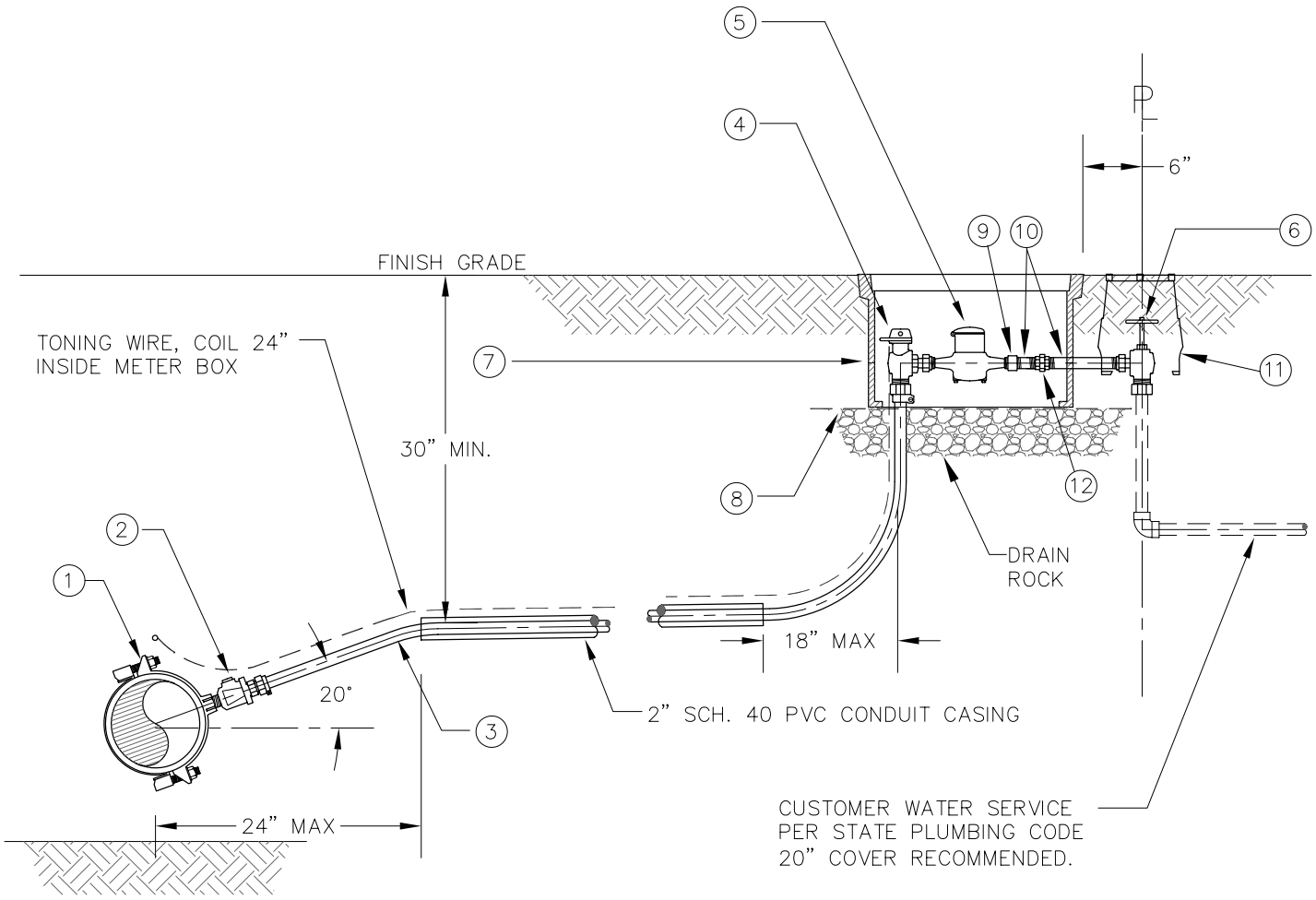

ITEM	SIZE	DESCRIPTION	SPECIFICATION
1	AS REQ'D	SADDLE	FORD/ROMAC 101BS, 3/4" FIP TAP
2	3/4"	BALL CORP. STOP	MIP x PEP PACK JOINT; FORD F1100-3, MCDONALD 4704B-22
3	3/4"	SERVICE PIPE	COPPER (TYPE K), 3/4", 160 PSI, IPS FITTING COMPATIBLE, NSF 61
4	3/4" OR 5/8"	ANGLE BALL METER VALVE	3/4" PEP PACK JOINT INLET x METER SWIVEL NUT OUTLET FORD BA43-332W OR BA43-232W, MCDONALD 4602B-22 OR 4642B-22
5	5/8" x 3/4"	WATER METER	INVENSYS SR-II, GALLON READ (CITY SUPPLIES)
6	3/4"	SERVICE VALVE ANGLE GLOBE	METER SWIVEL NUT INLET X 3/4" FIP OUTLET FORD GA13-332 (CUSTOMER SHUT-OFF,CITY SUPPLIES)
7	12"x20"X12"	METER BOX	ARMORCAST - BOX: A6000485-SA LID: A6000484-R
8	13" x 20"	FELT PAPER	90-LB FELT PAPER, ASPHALT SATURATED
9	3/4"	COUPLING	THREADED BRONZE COUPLING, SHORT
10	3/4"	NIPPLE	THREADED RED BRASS NIPPLE, LENGTH AS REQ'D
11	6" ROUND	VALVE BOX	ROUND VALVE BOX - RAINBIRD VB-6RND
12	3/4"	UNION	BRONZE UNION

City of Amity
109 Maddox Street
Amity, Oregon 97101
503.835.3711

STANDARD 3/4" WATER SERVICE CONNECTION

DETAIL NO.
W-600
3/31/04