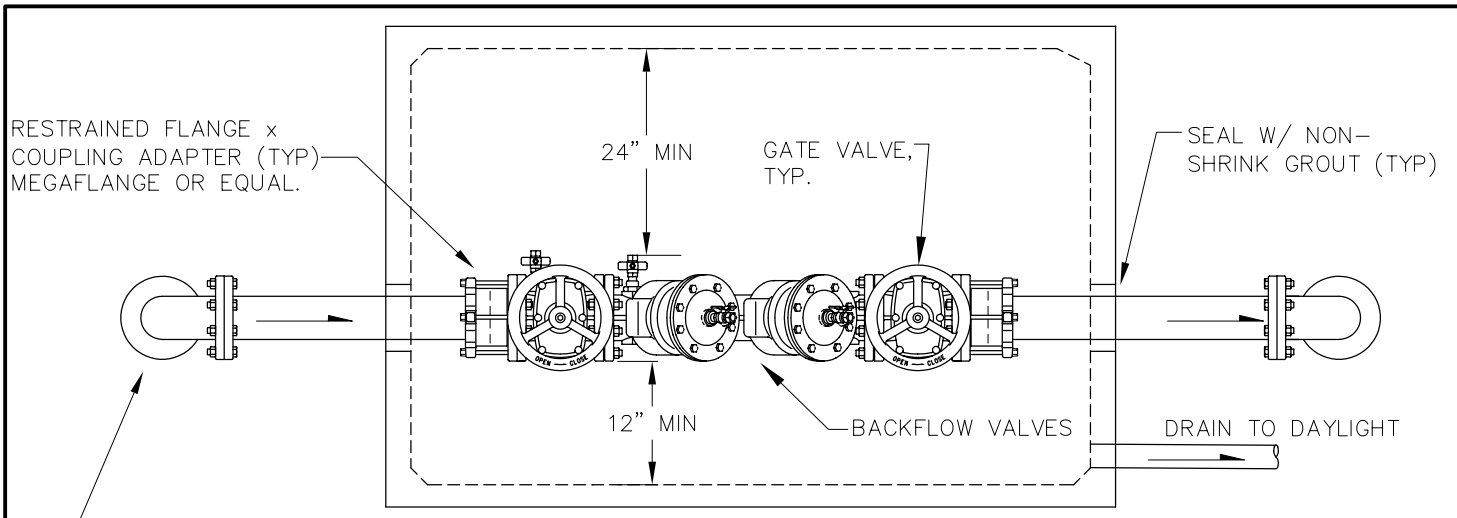

PLAN
NTS

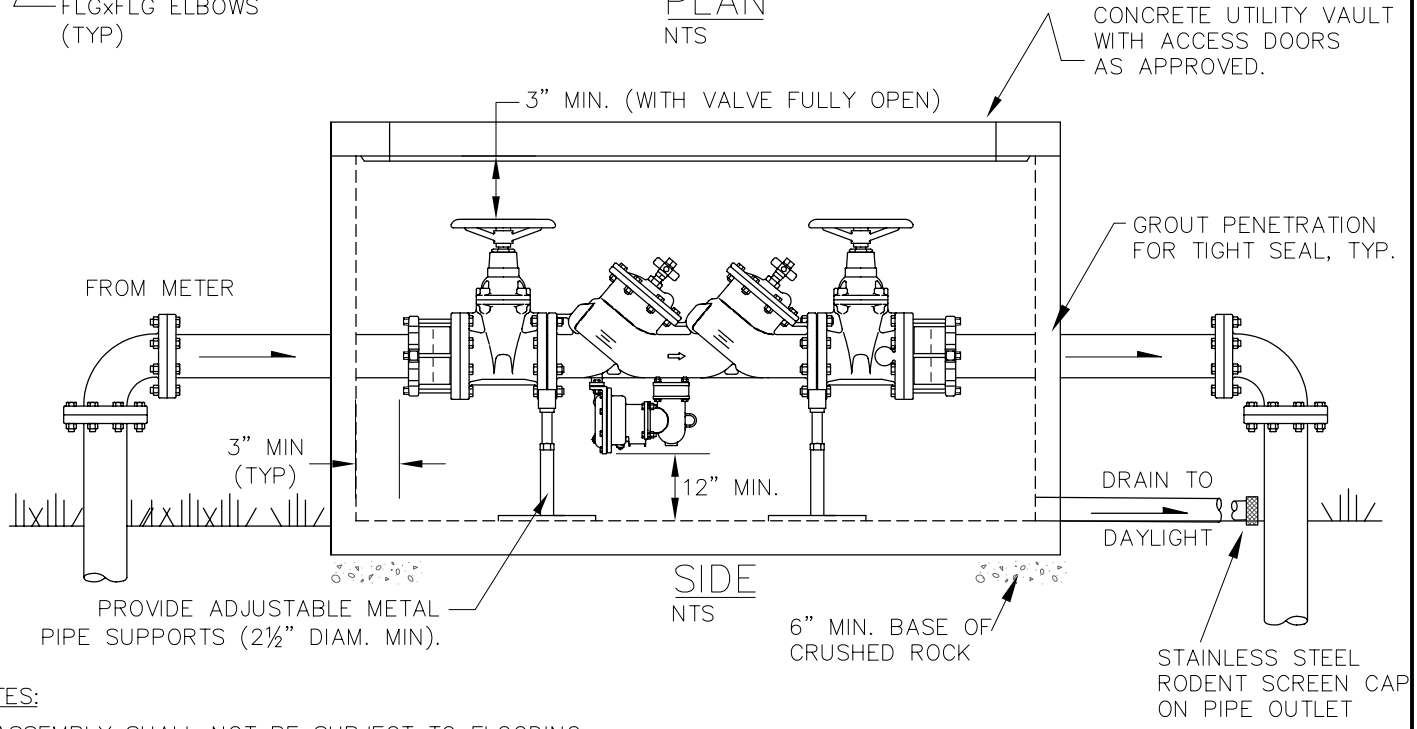

SIDE
NTS

NOTES:

1. ASSEMBLY SHALL NOT BE SUBJECT TO FLOODING.
2. RPBA SHALL BE INSTALLED ABOVE THE 100 YEAR FLOOD LEVEL, UNLESS OTHERWSIE APPROVED.
3. RPBAs ARE TYPICALLY INSTALLED ABOVE-GRADE IN WELL-DRAINED AREAS, BUT MAY BE INSTALLED BELOW-GRADE IN VAULT IF AN ADEQUATE AIR-GAPPED, BORE-SIGHTED DRAIN (SLOPE 1/8"/FT.) TO DAYLIGHT IS PROVIDED.
4. DRAIN LINES SHALL BE SIZED TO ACCOMODATE FULL RELIEF VALVE DISCHARGE FLOW.
5. CLEARANCES ALSO APPLY WHEN ASSEMBLIES ARE INSTALLED INSIDE BUILDING.
6. BRASS OR PLASTIC TEST PORT PLUGS ARE REQUIRED FOR ALL VAULT INSTALLATIONS.
7. ALL EXPOSED PIPE AND FITTINGS SHALL BE DUCTILE IRON.
8. RPBA SHALL BE INSTALLED HORIZONTALLY UNLESS DEVICE IS SPECIFICALLY APPROVED FOR VERTICAL INSTALLATION.
9. PROVIDE PROTECTION FROM FREEZING.
10. DO NOT PLUG OR EXTEND RELIEF VALVES.
11. MAXIMUM HEIGHT OF INSTALLATION SHALL NOT EXCEED 5 FEET UNLESS THERE IS A PERMANENTLY INSTALLED PLATFORM MEETING OSHA STANDARDS TO FACILITE SERVICING THE ASSEMBLY.
12. VAULT SHALL BE SIZED ACCORDINGLY TO PROVIDE MINIMUM CLEARANCES.

City of Amity
109 Maddox Street
Amity, Oregon 97101
503.835.3711

REDUCED PRESSURE BACKFLOW ASSEMBLY (2½" UP)

DETAIL NO.
W-805
3/31/04