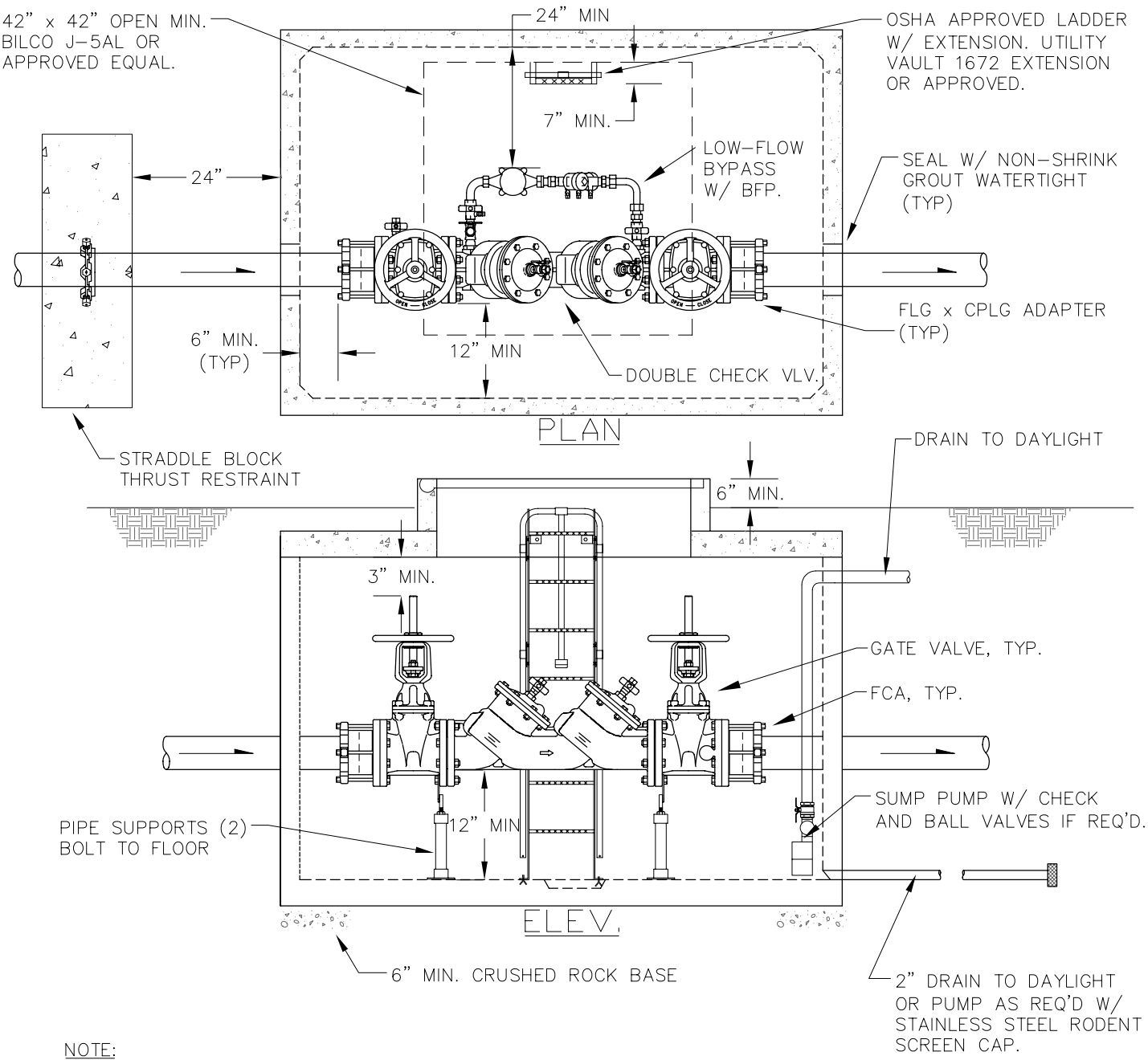

NOTE:

1. FOR FIRE LINE INSTALLATIONS. SUBMIT DETAIL DRAWING AND SPECS FOR APPROVAL.
2. ASSEMBLY SHALL NOT BE SUBJECT TO FLOODING.
3. DCDAs ARE TYPICALLY INSTALLED BELOW-GRADE. DRAIN TO DAYLIGHT OR PUMP AS REQUIRED.
4. PUMP SHALL HAVE MIN. CAPACITY OF 5 GPM. DRAIN SHALL HAVE BACKWATER VALVE AND RODENT SCREEN.
5. BRASS OR PLASTIC PLUGS ARE REQUIRED FOR ALL TESTING PORTS.
6. DOMESTIC SERVICE SHALL NOT BE INSTALLED OFF THE FIRE SERVICE UNLESS APPROVED.
7. VAULTS SHALL BE PRECAST CONCRETE AS REQUIRED AND SHALL BE SIZED TO PROVIDE THE MINIMUM CLEARANCES NOTED.

City of Amity
109 Maddox Street
Amity, Oregon 97101
503.835.3711

DOUBLE CHECK DETECTOR ASSEMBLY (2½" UP)

DETAIL NO.
W-905
3/31/04