SIDEWALK ADJACENT TO CURB

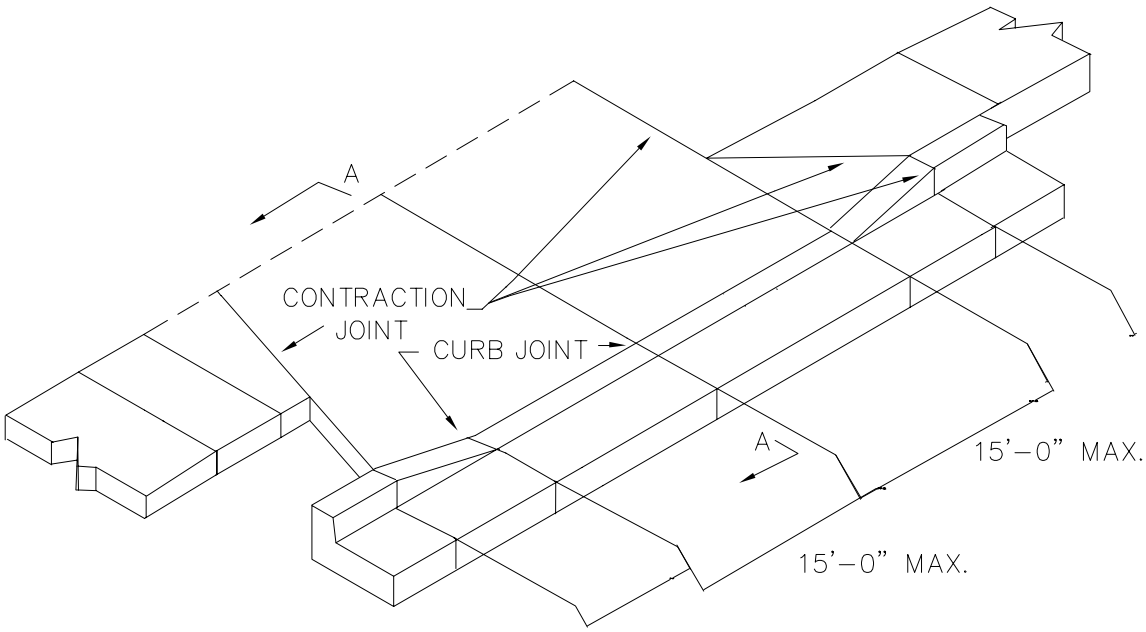


SIDEWALK AWAY FROM CURB

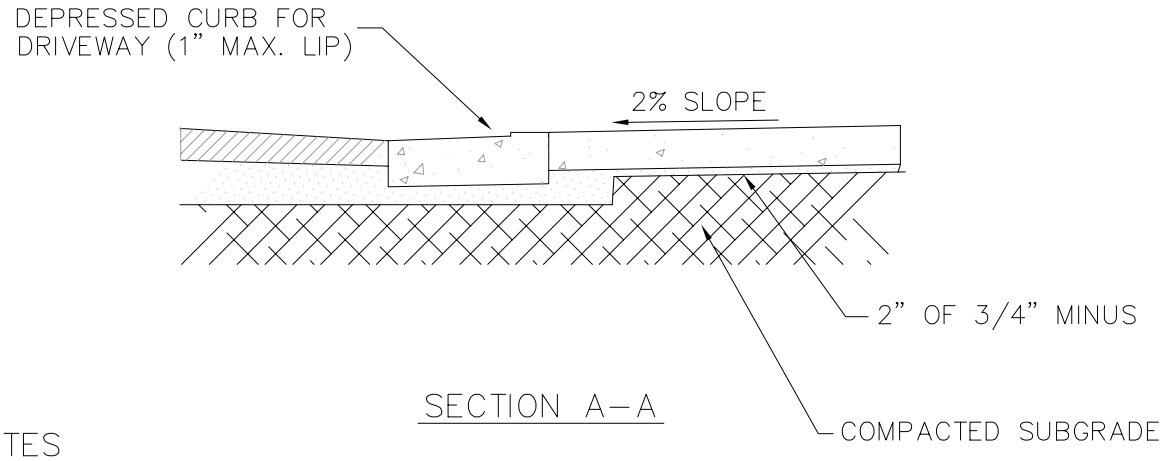


SECTION A–A

NOTES

1. CONCRETE SHALL HAVE A MINIMUM BREAKING STRENGTH OF 3300 PSI AFTER 28 DAYS, 6 SACK MIX.
2. CURB SHALL BE TROWELED JOINT WITH A MIN. 1/2" RADIUS ALONG BACK OF CURB.
3. DRIVEWAY SHALL BE A MINIMUM 6" THICK.

City of Amity
109 Maddox Street
Amity, Oregon 97101
503.835.3711

RESIDENTIAL DRIVEWAY APPROACH DETAIL

DETAIL NO.
T-150
1/19/04