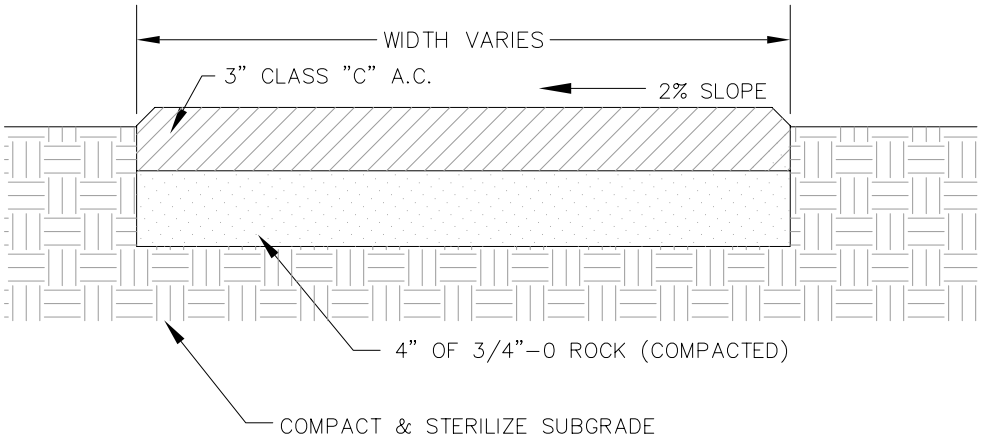

—OR—

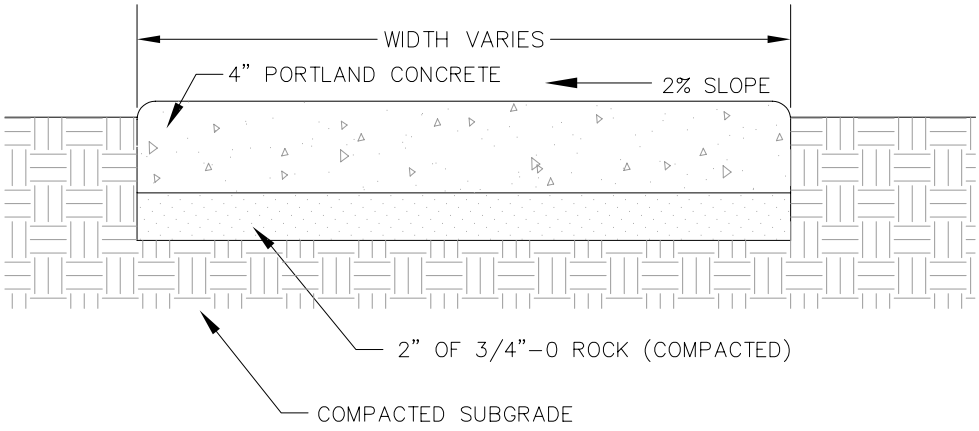

NOTES

1. CONCRETE SHALL BE 3300 PSI AT 28 DAYS, SIX SAC MIX, SLUMP RANGE OF 1 1/2"-3"

2. SIDEWALK PANELS SHALL BE SQUARE, 3/4" DEEP SCRIBES AT JOINTS, EDGED ON 4 SIDES AND HAVE A LIGHT BROOM FINISH.

3. PEDESTRIAN PATH OR BIKEWAY SHALL HAVE A MINIMUM WIDTH OF 5 FEET.

City of Amity
109 Maddox Street
Amity, Oregon 97101
503.835.3711

PEDESTRIAN / BIKE PATH DETAILS

DETAIL NO.
T-201
1/19/04